Identification number WDB 2083651F127230

MD mode | 1. Car | 208365 CLK 320:CLK 320 JAPAN:CLK 320 USA | 208.365 | 35 REAR AXLE | 080 REGULATION OF DYNAMIC HEADLAMP RANGE ...

✓	Item no.	Part number	Designation/description	Quantity	Version
☑	5 ⊞	A 010 542 77 17	**SENDER UNIT** (TURNING ANGLE SENSOR)	001	

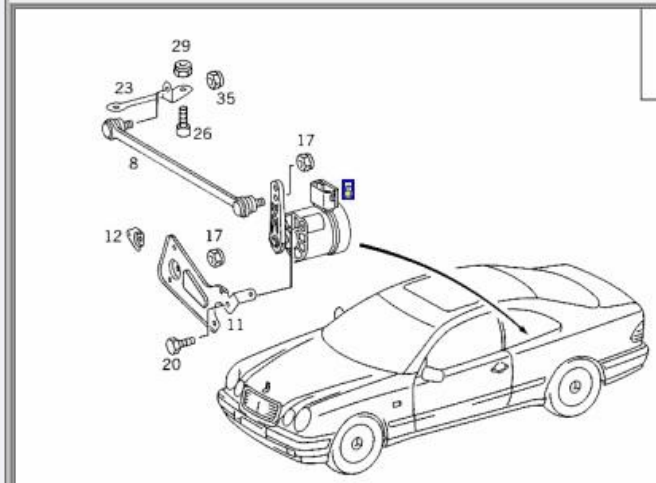

Write protection	Shopping list	Date/Time
	-- Temporary shopping list --	
	CLK/WDB2083651F127230	07/23/19 02:
	WDB2083651F127230	11/28/18 02:

No.	Dam...	Item no.	Part number	ES1	ES2	Designation/description	Quantity	Qty o...	Price	Warra...
1		5	A 010 542 77 17			SENDER UNIT (TURNING ANGLE SENSOR)	2			