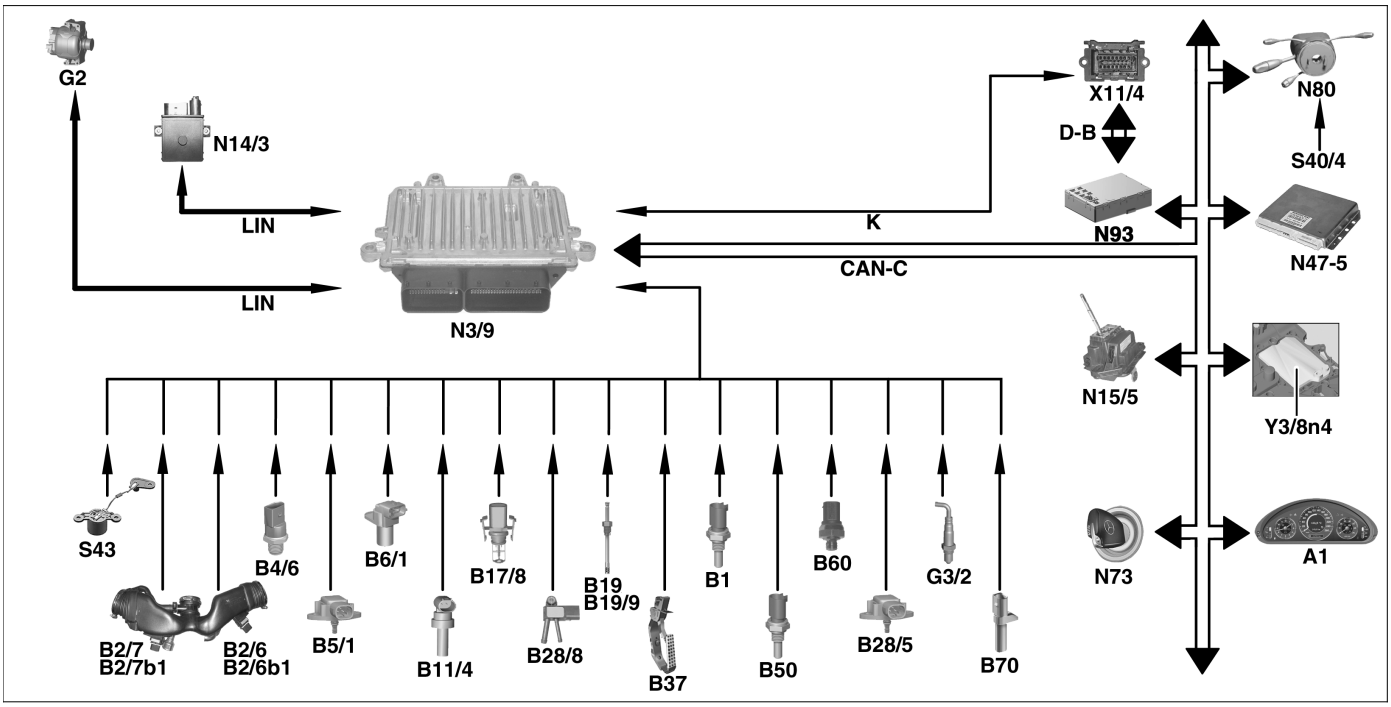

P07.16-2867-09

Shown on model 211.022 with engine OM 642.920, except Code (494) USA version, with Code (474) Particulate filter, with transmission 722.9

CAN-C	*Controller Area Network bus Class C (engine compartment) (CAN-C)*
D-B	*Diagnosis bus*
LIN	*Local interconnect network (LIN)*
A1	*Instrument cluster*
B1	*Oil temperature sensor*
B2/6	*Left hot film MAF sensor*
B2/6b1	*Intake air temperature sensor*
B2/7	*Right hot film MAF sensor*
B2/7b1	*Intake air temperature sensor*
B4/6	*Rail pressure sensor*
B5/1	*Charge pressure sensor*
B6/1	*Camshaft Hall sensor*
B11/4	*Coolant temperature sensor*
B17/8	*Charge air temperature sensor*
B19	*TWC [KAT] temperature sensor*
B19/9	*Temperature sensor upstream of diesel particulate filter*
B28/5	*Pressure sensor downstream of air filter*
B28/8	*Pressure differential sensor (DPF)*
B37	*Accelerator pedal sensor*
B50	*Fuel temperature sensor*
B60	*Exhaust back pressure sensor*
B70	*Crankshaft Hall sensor*
G2	*Alternator*
G3/2	*O2O2 sensor upstream TWC [KAT]*
N3/9	*CDI control unit*
N14/3	*Glow time output stage*
N15/5	*Electronic selector lever module control unit*
N47-5	*ESP control unit*
N73	*EIS [EZS] control unit*
N80	*Steering column module*
N93	*Central gateway control unit*
S40/4	*CC [TPM] switch*
S43	*Oil level check switch*
X11/4	*Data link connector*
Y3/8n4	*Fully integrated transmission control (VGS) control unit*

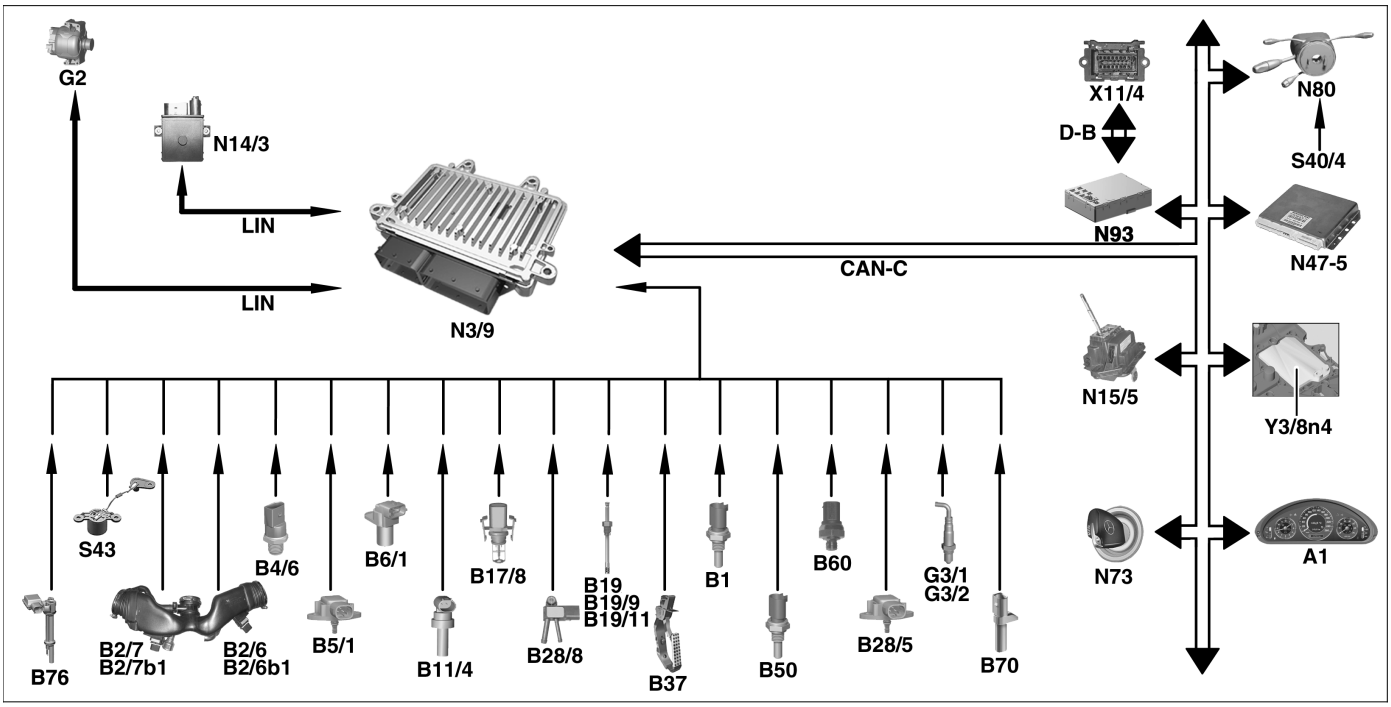

P07.16-3125-09

Shown on model 211.022 with OM 642.920, with Code (494) USA version, with transmission 722.9

CAN-C	*Controller Area Network bus Class C (engine compartment) (CAN-C)*
D-B	*Diagnosis bus*
LIN	*Local interconnect network (LIN)*
A1	*Instrument cluster*
B1	*Oil temperature sensor*
B2/6	*Left hot film MAF sensor*
B2/6b1	*Intake air temperature sensor*
B2/7	*Right hot film MAF sensor*
B2/7b1	*Intake air temperature sensor*
B4/6	*Rail pressure sensor*
B5/1	*Charge pressure sensor*
B6/1	*Camshaft Hall sensor*
B11/4	*Coolant temperature sensor*
B17/8	*Charge air temperature sensor*
B19	*TWC [KAT] temperature sensor*
B19/9	*Temperature sensor upstream of diesel particulate filter*
B19/11	*Temperature sensor upstream of turbocharger*
B28/5	*Pressure sensor downstream of air filter*
B28/8	*Pressure differential sensor (DPF)*
B37	*Accelerator pedal sensor*
B50	*Fuel temperature sensor*
B60	*Exhaust back pressure sensor*
B70	*Crankshaft Hall sensor*
B76	*Fuel filter water level sensor*
G2	*Alternator*
G3/1	*O2O2 sensor downstream TWC [KAT]*
G3/2	*O2O2 sensor upstream TWC [KAT]*
N3/9	*CDI control unit*
N14/3	*Glow time output stage*
N15/5	*Electronic selector lever module control unit*
N47-5	*ESP control unit*
N73	*EIS [EZS] control unit*
N80	*Steering column module*
N93	*Central gateway control unit*
S40/4	*CC [TPM] switch*
S43	*Oil level check switch*
X11/4	*Data link connector*
Y3/8n4	*Fully integrated transmission control (VGS) control unit*